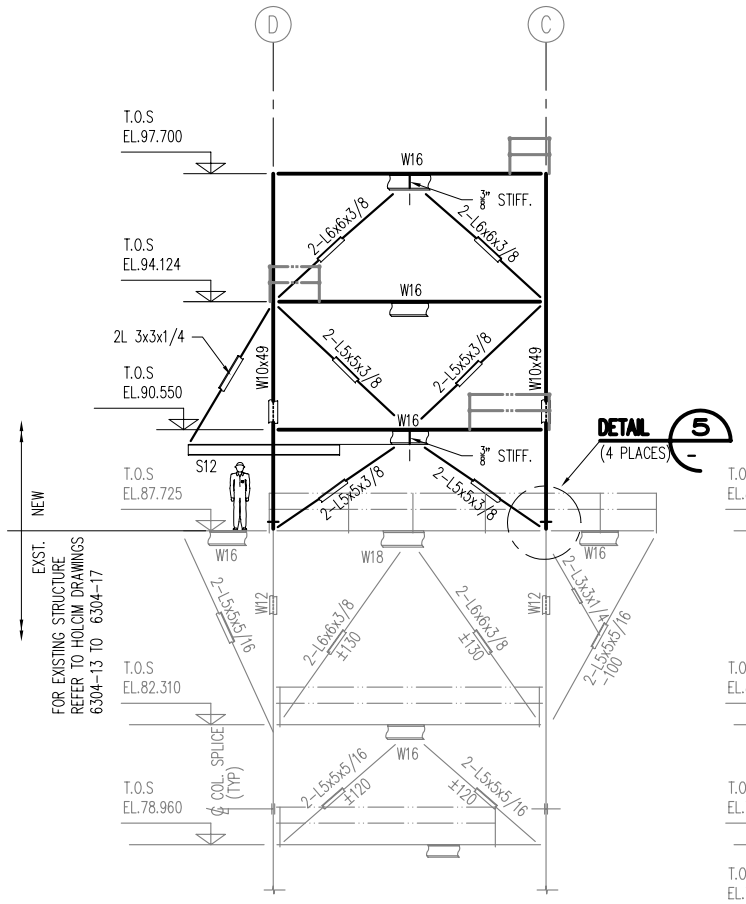

SECTION 1
LINE "2x" 6304-031

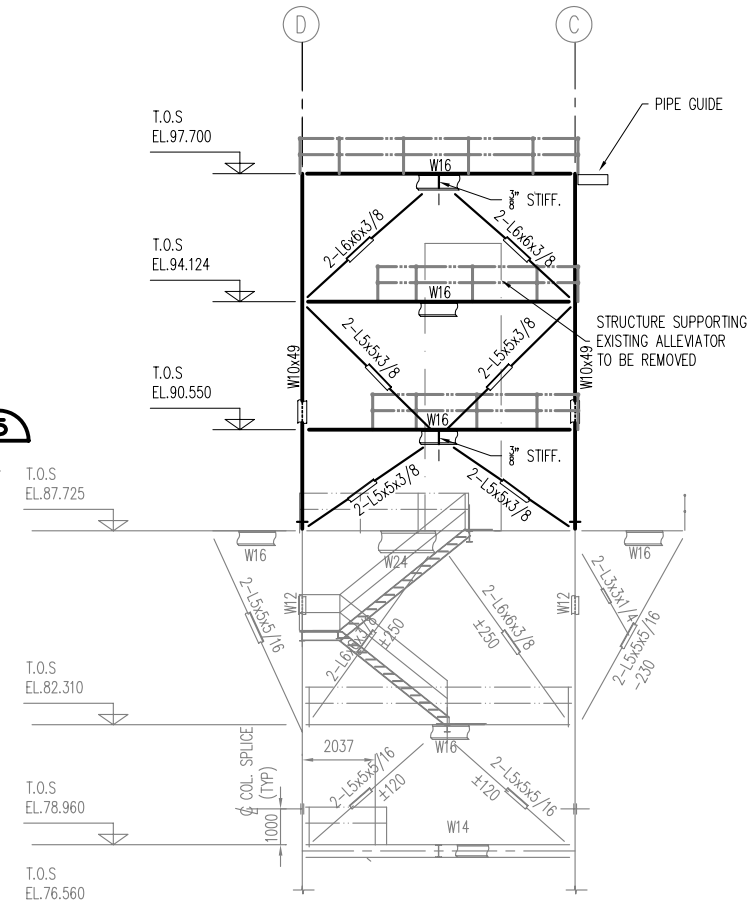

SECTION 2
LINE "4" 6304-031

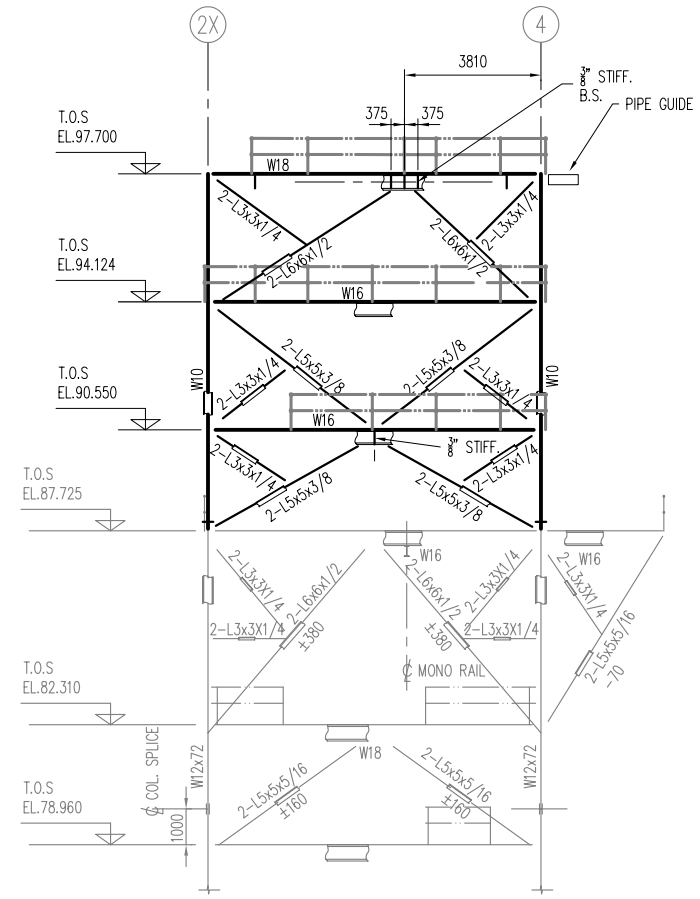

SECTION 3
LINE "C" 6304-031

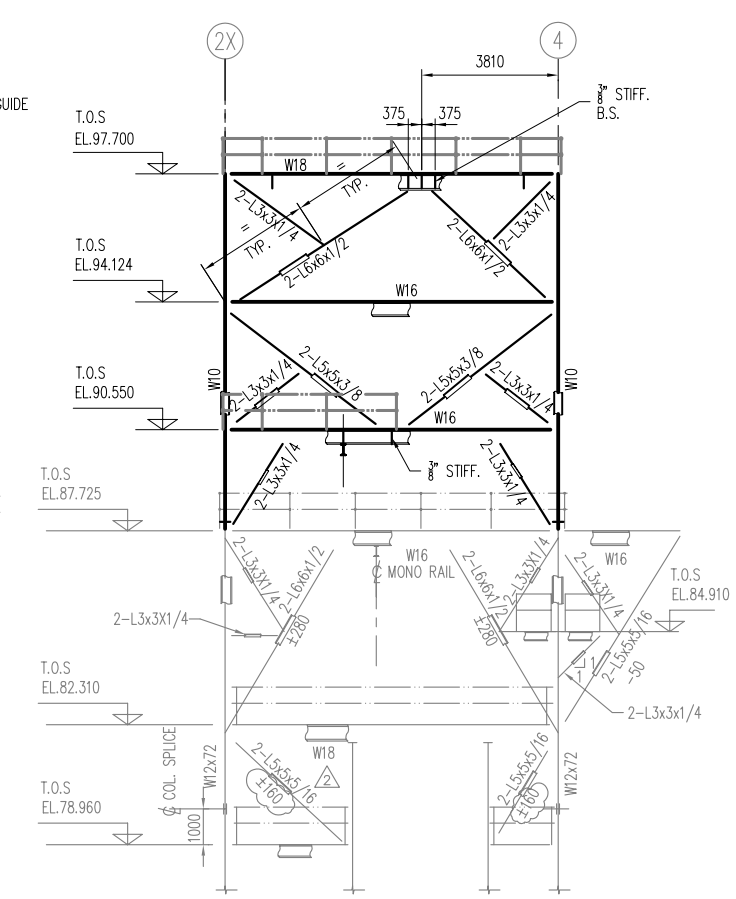

SECTION 4
LINE "D" 6304-031

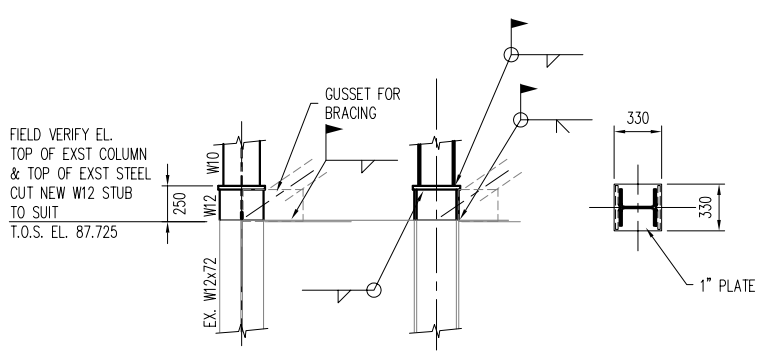

DETAIL 5

ALL BRACING AND BEAM COLUMN CONNECTION SHALL BE "SLIP CRITICAL" BOLT CONNECTIONS.

NOTES:

1. FOR NOTES SEE DWG 6304-051
2. ALL STRUCTURAL STEEL MEMBERS & PLATE GIRDERS TO BE ASTM A572 GRADE 50 EXCEPT CHANNELS, ANGLES, BASE PLATES, STUBS & STIFFENER PLATES WHICH ARE ASTM A36 U.N.O..
3. EXST PLATFORMS HOLCIM DWG. 10843-6304-013 & 14

ALL ELEVATIONS SHOWN ARE ABOVE SEA LEVEL

REVISION

DATE	NO.	REMARKS	BY
JUN/30/04	1	CHANGED DRAWING No. FROM 6404-032 TO 6404-052	JR

DATE	REV.	ISSUED FOR	BY
JUN/30/04	1	CONSTRUCTION	JR
JUN/23/04	0	CONSTRUCTION	JR
MAY/21/04	A	TENDER	JR

The information in this drawing is confidential and may be legally privileged. It is intended solely for the addressee. Access to this drawing by anyone else is unauthorized.
If you are not the intended recipient, any disclosure, copying, distribution or any action taken or omitted to be taken in reliance on it, is prohibited and may be unlawful.

Holcim
Holcim (US) Inc.
HOLLY HILL, SC

Con Engineers Inc.
81 THORNBROOK CRT.
THORNHILL, ONT. L4J 7X4
TEL (905) 669-1153
FAX (905) 669-1158

TITLE

CEMENT STORAGE RECLAIM TOWER EXTENSION SECTIONS

DRAWN	JR/WP	MAY/10/04
CHK.	IK	MAY/10/04
APP.	JR/IK	MAY/10/04

SCALE 1 : 100

DRAWING NUMBER 10843-6304-052 REV. 1

C:\drawings\Con\resumes\6304-052-1.dwg MAY 18, 2005 21:46